Drawings

Models Y/13FEA and Y/13FEA1 Pneumatic Flange Mounting Differential Pressure Transmitters

Unit: mm

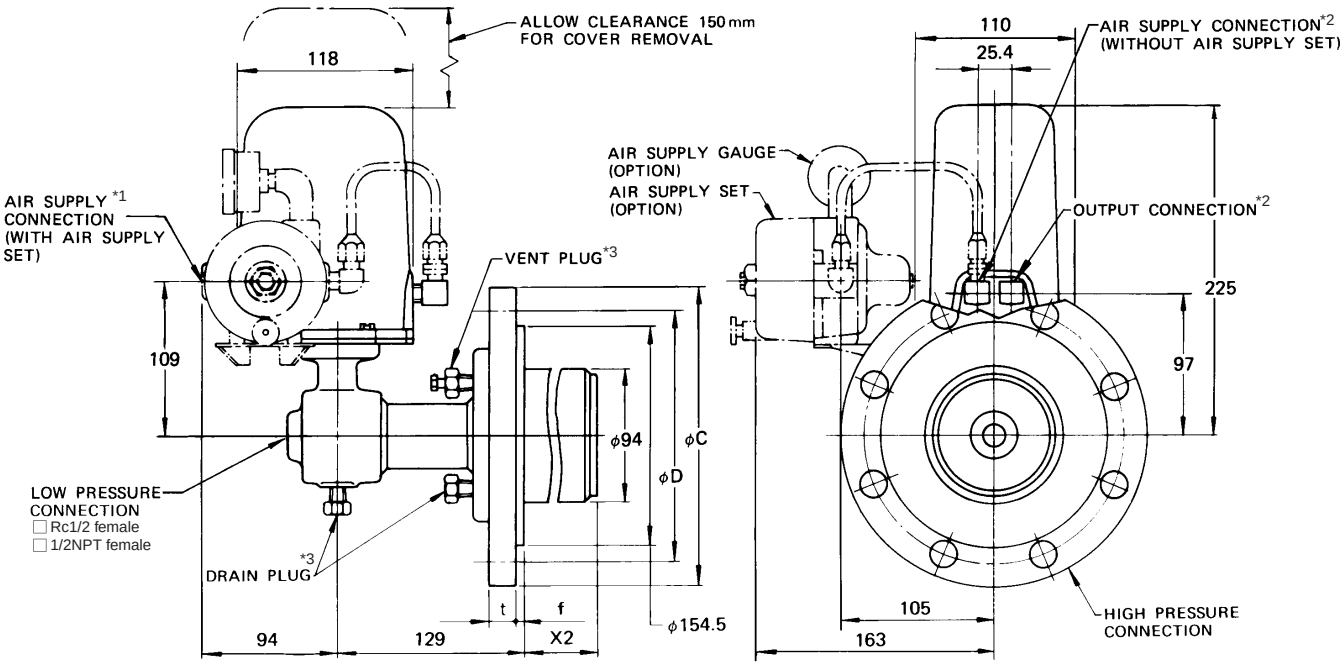

*1. AIR SUPPLY SET CONNECTION
- ☐ Rc1/4 female
- ☐ 1/4NPT female

*2. AIR SUPPLY CONNECTION
- ☐ Rc1/4 female
- ☐ 1/4NPT female

*3. DRAIN and VENT PLUG
- ☐ R1/4 male
- ☐ 1/4NPT male

Flange Rating	Bolt Holes		øD	øC	t	f
	No.	DIA.				
100 mm JIS 10K	8	19	175	210	18	4.8
100 mm JIS 20K	8	23	185	225	24	6.4
4-inch ANSI Class 150	8	19.1	190.5	228.6	22.2	4.8
4-inch ANSI Class 300	8	22.2	200	254	30.2	6.4
4-inch JPI Class 150	8	19	190.5	229	24	4.8
4-inch JPI Class 300	8	22	200.2	254	32	6.4

All Rights Reserved, Copyright © 1979, Yokogawa Electric Corporation.
Subject to change without notice. Printed in Japan.

SD 02C01D03-01E
11th Edition: Apr. 1, 2003